Series Resonant Converter with Third-Order Commutation Network

Rui Liu, *Member, IEEE,* and C. Q. Lee, *Member, IEEE*

***Abstract*—In this paper, a new converter is derived by adding an inductor in parallel with the resonant capacitor of the conventional series resonant converter (SRC), which is called LLC-SRC. It will be shown that the control characteristics of the new converter are much improved in contrast with those of the conventional SRC. Another advantage of the new converter over the conventional SRC is that it has less component stresses. Based on the characteristic curves derived from the analysis, a systematical design procedure for the new converter is derived. Experimental results are also presented.**

I. Introdcution

THE conventional series resonant converter (SRC) possesses the properties of zero-current-switching, low-order converter voltage gain, and incorporating the leakage inductance of the output transformer in the converter design [1], [2]. These are desirable features for high-frequency and low-output voltage applications. However, the output voltage regulation of the SRC is very poor because a very wide range of switching frequency is required for both the load and line regulations. To overcome this difficulty, we may use the PWM or phase-shift control scheme and operate the SRC at its resonant frequency, but this results in the increase of the circuit complexity and the design difficulty [3]–[5].

In this paper, we show that the above disadvantage can be overcome by simply adding an inductor in parallel with the resonant capacitor of the conventional SRC, leading to a new converter topology of SRC known as the LLC-SRC, as shown in Fig. 1. It should be noted that even though the bipolar junction transistors (BJT's) are drawn in Fig. 1 as switching devices, other type of semiconductor devices, such as GTO's and MOSFET's, can also be used in this converter, but BJT's and GTO's are preferred. This is because, as will be evident, the semiconductor devices can be turned off at zero current when operated in the natural commutation mode, same as the conventional SRC. This converter can be analyzed by means of a two-dimensional state-plane diagram through a proper transformation of its state variables [6]. Based on the analysis results, a set of characteristic curves is derived showing that the control characteristics and component stresses of the new converter are improved as compared with those of the conventional SRC. Based on these curves, the design procedure for the LLC-SRC is formulated. We will use the experimental results from a breadboard model to verify our theoretical work.

Manuscript received September 21, 1989; revised January 23, 1992.

R. Liu is with the Department of Integrated Power Circuits and Systems, Philips Laboratories, Briarcliff Manor, NY 10510.

C. Q. Lee is with the Department of Electrical Engineering and Computer Science, University of Illinois at Chicago, Chicago, IL 60680.

IEEE Log Number 9200719.

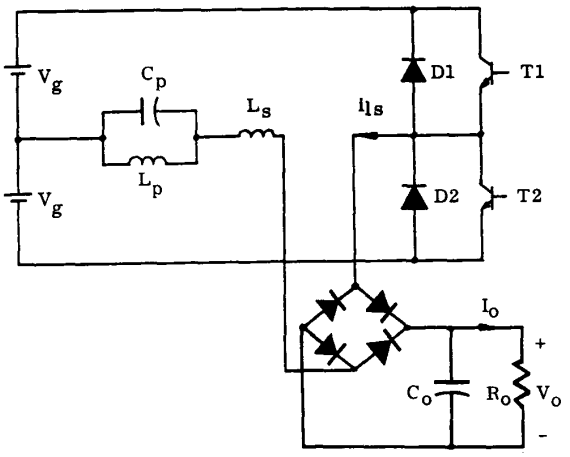

Fig. 1. The LLC-type series resonant converter.

Before proceeding to the analysis, we first briefly explain the circuit theory point of view why the newly added inductor can improve the control characteristics greatly. Under the assumptions to be given in Section II, the equivalent circuit of the LLC-SRC is given in Fig. 2. Fig. 2 shows that the capacitor C_p and the inductor L_p introduce a transmission zero at frequency $\omega_{op} \equiv 1/\sqrt{L_p C_p}$. The natural resonant frequency of the circuit, which is also the transmission pole frequency, occurs at ω_o with $\omega_{op} < \omega_o$, where $\omega_o \equiv 1/\sqrt{LC_p}$ and $L \equiv (L_s L_p)/(L_s + L_p)$. By making ω_{op} closer to ω_o, the transmission characteristics of the circuit between ω_{op} and ω_o become sharper, resulting in a more abrupt control characteristics of the converter. Thus, the control characteristics of the converter can be improved by choosing the proper ratio of ω_{op}/ω_o or L_s/L_p.

II. Steady-State Analysis

In the steady-state analysis of the LLC-SRC, the following conditions are assumed.

1) Switching devices T1, T2, D1, and D2 are ideal. T1 and T2 are switched at 50% duty cycle over a switching period.

0885-8993/92$03.00 © 1992 IEEE

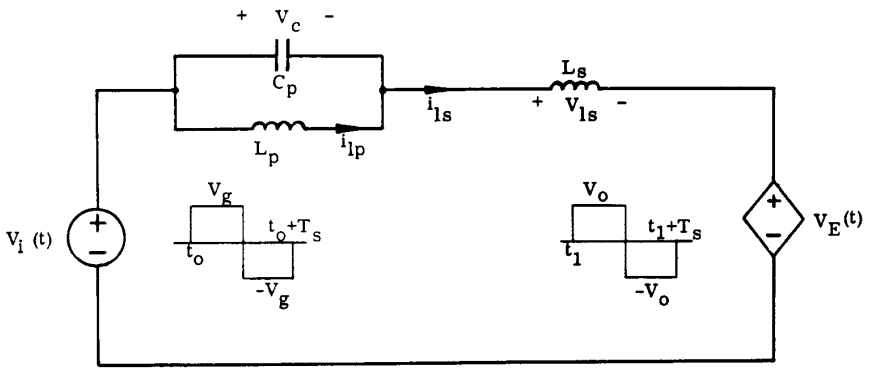

Fig. 2. The equivalent circuit of Fig. 1.

2) The capacitance of the output filtering capacitor C_o is large enough so that the output voltage V_o can be considered as constant.
3) The converter circuit is lossless.

Based on the first assumption, the effect of the switching devices on the input voltage source can be replaced by an equivalent square-wave voltage source $v_i(t)$ with amplitudes $\pm V_g$ and period T_s. Furthermore, the output rectifying circuit can be replaced by a dependent voltage sink $v_E(t)$ due to the second assumption. The voltage polarity of $v_E(t)$ depends on the sign of the resonant inductor current $i_{ls}(t)$ as described by the following equation:

$$v_E(t) = \frac{i_{ls}(t)}{|i_{ls}(t)|} V_o. \tag{1}$$

Depending on the values of $v_E(t)$ and $v_i(t)$, there exist four topological circuit modes in the equivalent circuit of Fig. 2, shown in Fig. 3. Table I shows the conduction states of each switching device in each circuit mode and the conditions for mode changes.

The steady-state response of the converter can be derived from the equivalent circuit of Fig. 2. The state equations for the equivalent circuit are given as follows.

$$\frac{d}{dt}\begin{bmatrix} i_{ls} \\ i_{lp} \\ v_{cp} \end{bmatrix} = \begin{bmatrix} 0 & 0 & -\frac{1}{L_s} \\ 0 & 0 & \frac{1}{L_p} \\ \frac{1}{C_p} & -\frac{1}{C_p} & 0 \end{bmatrix} \begin{bmatrix} i_{ls} \\ i_{lp} \\ v_{cp} \end{bmatrix} + \begin{bmatrix} \frac{1}{L_s} & -\frac{1}{L_s} \\ 0 & 0 \\ 0 & 0 \end{bmatrix} \begin{bmatrix} v_i(t) \\ v_E(t) \end{bmatrix}. \tag{2}$$

Equation (2) represents a third-order system with a nonlinear dependent voltage sink, which is difficult to solve by the conventional circuit approach. However, after a

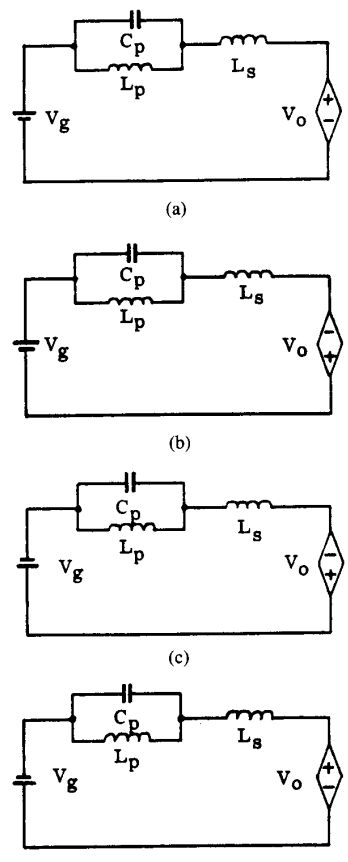

Fig. 3. The four linear circuit modes. (a) M1: $t_o \le t < t_1$. (b) M2: $t_1 \le t < t_2$. (c) M3: $t_2 < t_3$. (d) M4: $t_3 \le t < t_o + T_s$.

TABLE I
CONDUCTION STATES OF SWITCHING DEVICES IN EACH CIRCUIT MODE

Mode	Switches On	Sign of the Resonant Current	$v_i(t)$	$v_E(t)$
M1	T1	$i_{ls}(t) > 0$	$+V_g$	$+V_o$
M2	D1	$i_{ls}(t) < 0$	$+V_g$	$-V_o$
M3	T2	$i_{ls}(t) < 0$	$-V_g$	$-V_o$
M4	D2	$i_{ls}(t) > 0$	$-V_g$	$+V_o$

careful study, it is found that, by using the following state transformation,

$$\begin{bmatrix} i_l \\ i_p \\ v_c \end{bmatrix} = \begin{bmatrix} 1 & -1 & 0 \\ 0 & 1 & 0 \\ 0 & 0 & 1 \end{bmatrix} \begin{bmatrix} i_{ls} \\ i_{lp} \\ v_{cp} \end{bmatrix} \tag{3}$$

the new state variables v_c and i_l can be decoupled from i_p so that their steady-state response can be represented by a two-dimensional state-plane diagram. Substituting (3) into (2), the following state equations in terms of i_l and v_c can be obtained.

$$\frac{di_l}{dt} = \frac{1}{L}\left\{\left[1 - \left(\frac{\omega_{op}}{\omega_o}\right)^2\right][v_i(t) - v_E(t)] - v_c\right\} \tag{4}$$

$$\frac{dv_c}{dt} = \frac{1}{C_p} i_l. \tag{5}$$

With all the voltages and currents normalized by V_g and V_g/Z_o, respectively, where $Z_o \equiv \sqrt{L/C_p}$, the normalized state-plane equation can be derived and is given by

$$\frac{dv_{nc}}{di_{nl}} = \frac{i_{nl}}{v_{ni} - v_{nE} - v_{nc}} \tag{6}$$

where

$$v_{ni} \equiv \left[1 - \left(\frac{\omega_{op}}{\omega_o}\right)^2\right]\frac{v_i(t)}{V_g} \tag{7}$$

$$v_{nE} \equiv \left[1 - \left(\frac{\omega_{op}}{\omega_o}\right)^2\right]\frac{v_E(t)}{V_g}. \tag{8}$$

In the foregoing equations, subscript n represents the normalization. Under steady-state conditions, the solutions of (6) consist of four circular arcs in the v_{nc}–i_{nl} plane over a switching period T_s. The centers of these circular arcs depend on the value of $v_i(t)$ and the sign of $i_{ls}(t)$ and are located at $(V'_{ng} - V'_{no}, 0)$, $(V'_{ng} + V'_{no}, 0)$, $(-V_{ng} + V'_{no}, 0)$, and $(-V'_{ng} - V'_{no}, 0)$, where $V'_{ng} \equiv 1 - (\omega_{op}/\omega_o)^2$, $V'_{no} \equiv [1 - (\omega_{op}/\omega_o)^2]M$, and $M \equiv V_o/V_g$, which is the converter voltage gain. Over one switching period, the solutions of (6) are given by

$$i_{nl}^2 + (V'_{ng} - V'_{no} - v_{nc})^2 = V_{nm1}^2 \quad \text{for } t_0 \le t < t_1 \tag{9}$$

$$i_{nl}^2 + (V'_{ng} + V'_{no} - v_{nc})^2 = V_{nm2}^2 \quad \text{for } t_1 \le t < t_2 \tag{10}$$

$$i_{nl}^2 + (-V'_{ng} + V'_{no} - v_{nc})^2 = V_{nm3}^2 \quad \text{for } t_2 \le t < t_3 \tag{11}$$

$$i_{nl}^2 + (-V'_{ng} - V'_{no} - v_{nc})^2 = V_{nm4}^2 \quad \text{for } t_3 \le t < t_o + T_s \tag{12}$$

where

$$V_{nm1}^2 = V_{nm3}^2 = i_{nl}^2(t_o) + [V'_{ng} - V'_{no} - v_{nc}(t_o)]^2 \tag{13}$$

$$V_{nm2}^2 = V_{nm4}^2 V'_{no} - v_{nc}(t_1)]^2 \tag{14}$$

t_o is the initial time and t_1 is the time when $i_{ls} = 0$. A typical state-plane diagram representing the steady-state solutions of (6) is shown in Fig. 4.

Based on the state plane diagram of Fig. 4, we derive the following expressions for the normalized average output and input currents:

$$I_{no} = \frac{2}{T_s}\int_{t_o}^{t_o + T_s/2} |i_{nls}(t)|\, dt = \frac{2}{\gamma}\left[1 - \left(\frac{\omega_{op}}{\omega_o}\right)^2\right] \cdot \left[v_{nc}(t_1) - \frac{\alpha\beta}{2}\left(\frac{\omega_{op}}{\omega_o}\right)^2\right] \tag{15}$$

$$I_{ng} = \frac{2}{T_s}\int_{t_o}^{t_0 + T_s/2} i_{nls}(t)\, dt = \frac{2}{\gamma}\left[1 - 1\left(\frac{\omega_{op}}{\omega_o}\right)^2\right] \cdot \left[v_{nc}(t_o) + \frac{\alpha\beta M}{2}\left(\frac{\omega_{op}}{\omega_o}\right)^2\right] \tag{16}$$

where $\gamma \equiv \omega_o(T_s/2) = \pi(f_o/f_s) = \pi/f_{ns} = \beta + \alpha$. β and α are the conduction angles of T1 and D1, respectively. Since the converter circuit is assumed lossless, conservation of power, $I_o V_o = I_g V_g$, leads to the following relation

$$M = -\frac{v_{nc}(t_o)}{v_{nc}(t_1)}. \tag{17}$$

Thus, the complete response of the converter, as well as I_{no}, I_{ng}, and M, can be determined from the foregoing equations once the state-plane diagram is obtained.

III. Characteristic Curves

From the design point of view, parameter ω_{op}/ω_o, M, γ, and Q_s, where $Q_s \equiv Z_o/R_o$, are the design parameters. The normalized boundary voltages and currents $v_{nc}(t_o)$, $i_{nl}(t_o)$, $v_{nc}(t_1)$ and $i_{nl}(t_1)$ are the state-plane parameters because the state-plane diagram can be characterized by these parameters. In this section, we show that based on a set of equations derived from the state-plane diagram, the control characteristics as well as the component stresses of the converter can be expressed in forms of the characteristic curves. It can be shown from the state-plane diagram given in Fig. 4 that the following equations can be derived.

$$i_{nl}(t_o) = \left[\frac{1 - M^2}{M^2} v_{nc}^2(t_o) v_{nc}(t_o) + i_{nl}^2(t_1)\right]^{1/2} \tag{18}$$

$$i_{nl}(t_1) = \frac{1}{2}\left(\frac{\omega_{op}}{\omega_o}\right)^2 [\gamma M + (\gamma - 2\beta)] \tag{19}$$

$$Q_s = \frac{1}{M\gamma}\left[1 - \left(\frac{\omega_{op}}{\omega_o}\right)^2\right]\left[2v_{nc}(t_1) - \alpha\beta\left(\frac{\omega_{op}}{\omega_o}\right)^2\right] \tag{20}$$

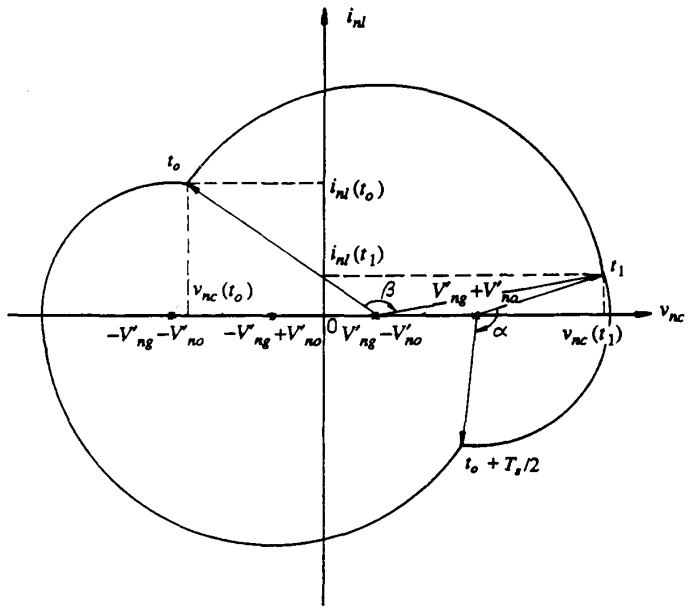

Fig. 4. Typical state-plane diagram for the LLC-type SRC.

$$\beta = \pi - \tan^{-1}\frac{i_{nl}(t_o)}{V'_{ng} - V'_{no} - v_{nc}(t_o)} + \tan^{-1}\frac{i_{nl}(t_1)}{V'_{ng} - V'_{no} - v_{nc}(t_1)} \tag{21}$$

$$\alpha = \tan^{-1}\frac{i_{nl}(t_1)}{v_{nc}(t_1) - V'_{ng} - V'_{no}} + \tan^{-1}\frac{i_{nl}(t_1)}{-v_{nc}(t_0) - V'_{ng} - V'_{no}}. \tag{22}$$

It is evident from (17)–(22) that there are six equations with nine unknown parameters: ω_{op}/ω_o, M, Q_s, $i_{nl}(t_o)$, $v_{nc}(t_o)$, $i_{nl}(t_1)$, $v_{nc}(t_1)$, α, and β. For given ω_{op}/ω_o, M, and Q_s, the remaining parameters can be numerically solved from these equations. Thus, for a fixed ω_{op}/ω_o, the control characteristic curves of M versus $f_{ns}(=\pi/\gamma)$ with Q_s as parameter can be plotted. Fig. 5 shows such curves with a different ratio of ω_{op}/ω_o. Fig. 5(a) represents the control characteristic curves of the conventional SRC ($\omega_{op}/\omega_o = 0$). Fig. 5 shows that the control characteristics of the new converter are much improved from that of the conventional SRC, whereas the advantage of low-converter voltage gain is still maintained.

It can be shown that once the state-plane diagram is given, the maximum component stress can be determined. Fig. 6 and Fig. 7 show the normalized maximum capacitor voltage v_{ncp}, inductor currents i_{nls} and i_{nlp}, respectively, as functions of the converter voltage gain M with Q_s as a parameter. For the purpose of comparison, the component stresses of the conventional SRC are also plotted in these figures. The comparison of the LLC-SRC and the conventional SRC is based on the condition that the input voltage and output power for both converters are the same. Since the output power is obtained by rectifying the series inductor current i_{ls} in both converters and i_{ls} possesses a sinusoidal-like waveform, the current stresses through the inductor L_s are the same for both converters under the same output power. Therefore, for the same V_g and Q_s, the normalized maximum series inductor current $i_{nls,\max}$ should be equal for both converters. This can be verified from Fig. 7(a), where the curves of $i_{nls,\max}$ of both the SRC and the LLC-SRC with $Q_s = 4.0$ merge.

The capacitor stresses depend on the values of Q_s and M, as seen from Fig. 6. Because a low value of Q_s can be chosen in the design of LLC-SRC but not in that of the SRC as shown in Fig. 5(a), the voltage stresses across the capacitor C_p of the LLC-SRC can be made lower than that of the SRC by choosing a lower value of Q_s.

IV. Design and Experimental Results

In this section, based on the characteristic curves given in Section III, we present a design procedure for the new converter by using a specified design example. Experimental results are also given.

A. Converter Design

Consider the following design specifications:

DC input voltage:	$2V_g = 120$ V
Load currents:	$I_o =$ 4–20 A
Output voltage:	$V_o = 5$ V
Resonant frequency:	$f_o =$ 400 kHz

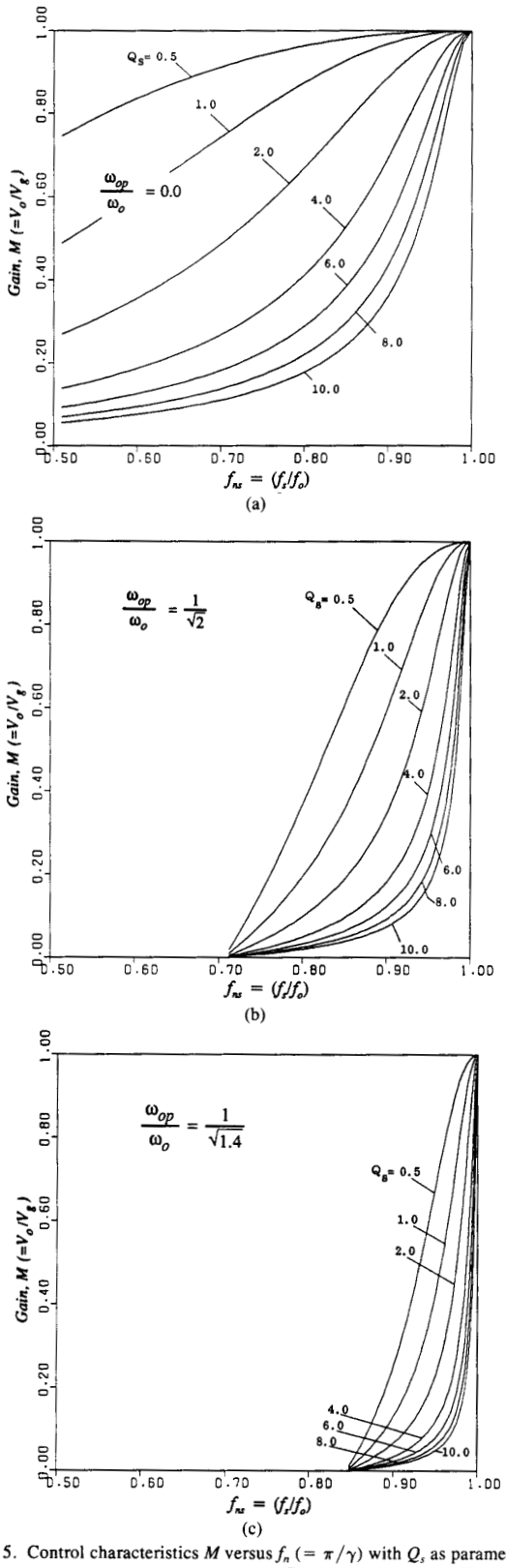

Fig. 5. Control characteristics M versus f_n ($= \pi/\gamma$) with Q_s as parameter. (a) $\omega_{op}/\omega_o = 0$. (b) $\omega_{op}/\omega_o = 1/\sqrt{2}$. (c) $\omega_{op}/\omega_o = 1/\sqrt{1.4}$.

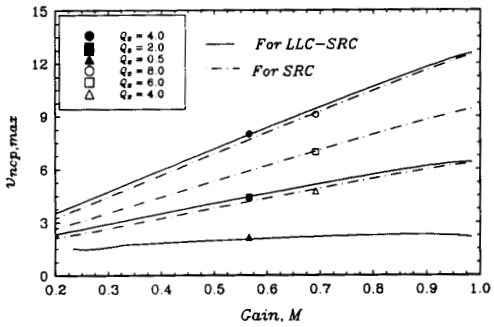

Fig. 6. Maximum normalized capacitor voltages $v_{nc,\max}$.

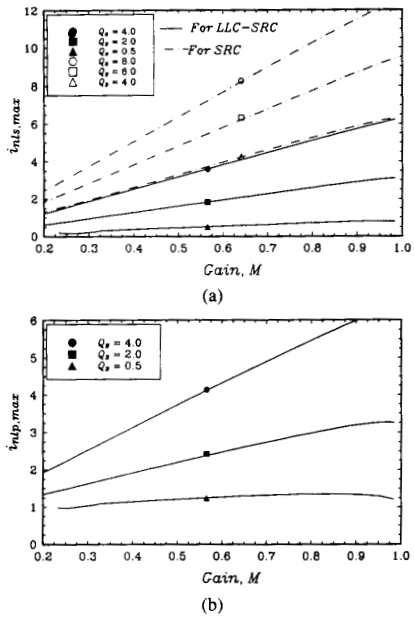

Fig. 7. (a) Maximum normalized inductor current $i_{nls,\max}$. (b) Maximum normalized inductor current $i_{nlp,\max}$.

In this design example, the maximum output power is 100 W ($I_o = 20$ A). From the design standpoint, the maximum output power represents the worst-case operation. Thus, we choose $V_o = 5$ V and $I_{o,\max} = 20$ A for the converter design. The component values and the output transformer ratio can be determined from the following design procedure.

1) Choose a proper value for M and Q_s from Fig. 5 such that the converter is operated away from $f_{ns} = 1.0$. Based on the given design specifications, the following values are chosen from Fig. 5(b).

$$\frac{\omega_{op}}{\omega_o} = \frac{1}{\sqrt{2}} \qquad M = 0.4 \quad \text{and} \quad Q_s = 4.0 \tag{23}$$

2) With ω_{op}/ω_o, M, and Q_s being specified, f_{ns} can be obtained from Fig. 5(b) as

$$f_n = 0.95. \tag{24}$$

3) The output transformer ratio N is determined from the following equation.

$$N = \frac{V_g M}{V_o + 2V_D} \approx 4 \tag{25}$$

where V_D is the rectifier voltage drop.

4) The characteristic impedance Z_o is given by

$$Z_o = R_o' Q_s = N^2 \frac{V_o + 2V_D}{I_{o,\max}} Q_s \approx 20.8\ \Omega \tag{26}$$

where R_o' is the equivalent load seen from the primary side of the transformer.

5) With $f_o = 400$ kHz and $Z_o = 20.8\ \Omega$, the components in the tank circuit can be determined and are given by

$$C_p = \frac{1}{2\pi f_o Z_o} \approx 0.0196\ \mu\text{F} \tag{27}$$

$$L = \frac{Z_o}{2\pi f_o} \approx 8.28\ \mu\text{H} \tag{28}$$

$$L_s = \frac{L}{1 - (\omega_{op}/\omega_o)^2} \approx 16.6\ \mu\text{H} \tag{28}$$

$$L_p = \frac{L}{(\omega_{op}/\omega_o)^2} = \approx 16.6\ \mu\text{H}. \tag{30}$$

To predict the changes in switching frequency f_s under different load conditions, the following two cases are considered.

1) Maximum power output ($I_{o,\max} = 20$ A)

$$f_s = f_n \times f_o = 0.95 \times 400 = 380 \text{ kHz} \tag{31}$$

2) Minimum power output ($I_{o,\max} = 4$ A)

$$Q_s = \frac{Z_o}{R_o'} = \frac{Z_o I_{o,\max}}{N^2(V_o + 2V_D)} \approx 0.76. \tag{32}$$

From Fig. 5(b), for $M = 0.4$ and $Q_s = 0.76$, we have

$$f_{ns} = 0.845 \quad \text{and} \quad f_s = 338 \text{ kHz}. \tag{33}$$

Hence, for 80% load change, the required switching frequency range is $\Delta f_s = 42$ kHz. The percentage change in f_s is approximately 11%, which is smaller when compared with a 51% change in f_s for the conventional SRC under the same load variation.

B. Experimental Results

Based on the above design results, a LLC-type SRC circuit was built and tested. The simplified circuit scheme is given in Fig. 8. The waveforms of the capacitor voltage v_{cp} and inductor current i_{ls} under maximum and minimum power outputs are given in Fig. 9(a) and (b), respectively. As a comparison, Table II shows the corresponding theoretical and experimental results that are in good agreement. The differences between the theoretical values and the measured data are due to the winding resistances of

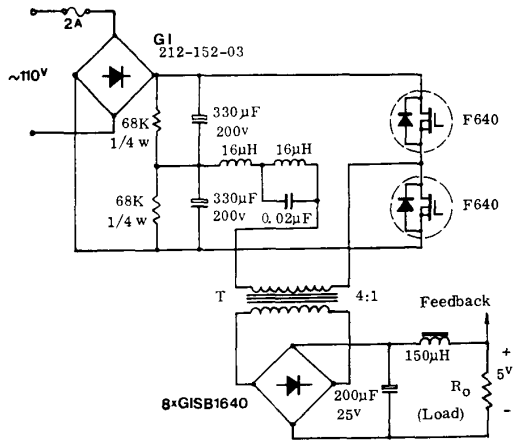

Fig. 8. Simplified circuit scheme of the implemented LLC-type SRC.

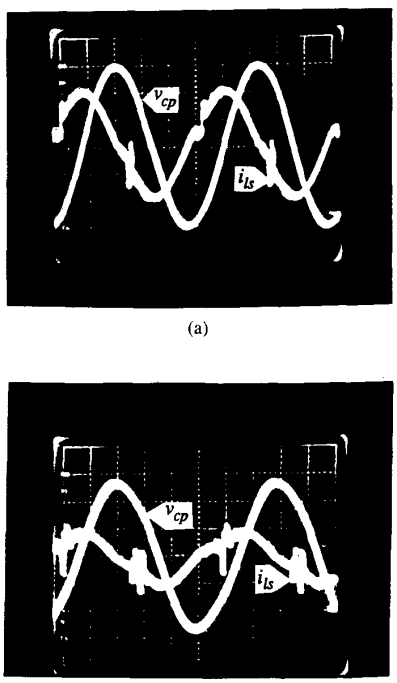

Fig. 9. Waveforms obtained from the experiments. (a) For maximum output power. Vertical axis voltage: 100 V/cm, vertical axis (current: 4 A/cm, horizontal axis: 0.5 μm/cm. (b) For minimum output power. Vertical axis (voltage: 50 V/sm, vertical axis (current): 4 A/cm, horizontal axis: 0.5 μs/cm.

TABLE II
CORRESPONDING THEORETICAL AND EXPERIMENTAL RESULTS

	Maximum Output Power		Minimum Output Power	
	Theoretical Value	Measured Value	Theoretical Value	Measured Value
f_s (kHz)	380	378	338	333
$V_{cp,\max}$ (V)	400	300	240	230
$i_{ls,\max}$ (A)	7.5	8.0	2.2	2.9

the inductors and transformer, the esr of the capacitor, and the junction capacitances of the switching devices that are neglected in the analysis.

V. Conclusion

In this paper, a new converter circuit named the LLC-SRC is analyzed by means of the state-plane diagram for the continuous conduction mode of operation within the frequency range $(\omega_{op}/\omega_o) \leq f_{ns} \leq 1.0$. It has been shown that the control characteristics and component stress of the LLC-SRC are improved as compared with those of the conventional SRC. Experimental results are good support of our theoretical work.

References

[1] V. Vorperian and S. Ćuk, "A complete dc analysis of the series resonant converter," in *Proc. IEEE-PESC'82*, 1982.

[2] C. Q. Lee and K. Siri, "Analysis and design of series resonant converter by state plane diagram," *IEEE Trans. Aerosp. Electron. Syst.*, vol. AES-22, no. 6, pp. 757-763, Nov. 1986.

[3] K. D. T. Ngo, "Analysis of a series resonant converter pulsewidth-modulated or current-controlled for low switching loss," *IEEE Trans. Power Electron.*, vol. PE-3, no. 1, pp. 55-63, Jan. 1988.

[4] S. Kim, "Non-linear inductor controlled series resonant converter with clamping diodes," M.S. thesis, University of Illinois at Chicago, June 1988.

[5] F. S. Tsai and F. C. Lee, "A complete dc characterization of a constant-frequency, clamped-mode, series resonant converter," in *Proc. IEEE-PESC'88*, 1988.

[6] C. Q. Lee, R. Liu, and I. Batarseh, "Analysis and design of parallel resonant converter with LLC-type commutation," *IEEE Trans. Aerosp. Electron. Syst.*, vol. 25, no. 6, pp. 844-847, Nov. 1989.

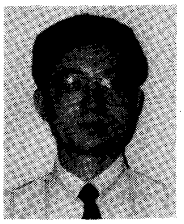

Rui Liu (M'92) received the B.S. degree in electrical engineering from the Chengdu Institute of Radio Engineering, Chengdu, China, in 1985. He received the M.S. and Ph.D. degrees in electrical engineering from the University of Illinois at Chicago (UIC), Chicago, IL, in 1988 and 1991, respectively.

After graduating from UIC, he joined Philips Laboratories at Briarcliff Manor, NY, as a senior member of research staff, where he has been involved in development of high-frequency and high-efficiency power supplies for consumer electronics products. His current interests are resonant converter topology and control, active power factor correction, and electronic ballast design.

Dr. Liu is a member of Tau Beta Pi.

C. Q. Lee (M'64) received the B.S., M.S. and Ph.D. degrees in electrical engineering from the Illinois Institute of Technology, Chicago, in 1957, 1959, and 1966, respectively.

From 1957 and 1965, he worked at Admiral Corporation, Chicago; Motorola Incorporated, Chicago; and Bell Telephone Laboratories, Holmdel, NJ, in the area of waveguide circuitry and microwave diode applications. Since 1965 he has been a member of the faculty of the Department of Electrical Engineering and Computer Science of the University of Illinois at Chicago. Dr. Lee is currently a Professor of Electrical Engineering and the director of Power Electronic Research Laboratory of the Department where he engages in research and development of high-frequency resonant dc-to-dc converters, high-frequency planar transformers, power factor correction techniques, and control schemes for parallel-connected converter systems.